MILITARY STANDARD

TUG REQUIREMENTS FOR HANDLING U.S. NAVY SHIPS

FSC 1925

AMSC N/A

DISTRIBUTION STATEMENT A. Approved for public release; distribution is unlimited

Attachment 1

FOREWORD

1. This military standard is approved for use by all Departments and Agencies of the Department of Defense.

2. Beneficial comments (recommendations, additions, deletions) and any pertinent data which may be of use in improving this document should be addressed to: Commander, Naval Sea Systems Command, SEA 55Z3, Department of the Navy, Washington, DC 20362-5101 by using the self-addressed Standardization Document Improvement Proposal (DD Form 1426) appearing at the end of this document or by letter.

CONTENTS

			Page
Paragraph	1.	SCOPE	1
	1.1	Purpose	1
	1.2	Objective	1
	1.3	Application	1
	2.	APPLICABLE DOCUMENTS	1
	2.1	Government documents	1
	2.1.1	Other Government documents, drawings, and publications	1
	3.	DEFINITIONS	1
	3.1	Definition of terms	1
	4.	GENERAL REQUIREMENTS	2
	4.1	Regulation and certification	2
	4.1.1	Bollard pull test certification	2
	4.1.1.1	Witnessing of bollard pull test	2
	4.1.2	Use of Navy signals	2
	4.2	Description of services	2
	4.2.1	General	2
	4.2.2	Submarines	2
	4.2.3	Miscellaneous services	2
	4.2.4	Emergency services	3
	5.	DETAILED REQUIREMENTS	3
	5.1	General	3
	5.1.1	Waiver of requirements	3
	5.2	Tug classification	3
	5.3	Type C - minimum tug	4
	5.3.1	Performance characteristics	4
	5.3.2	Fendering	4
	5.3.2.1	Fendering requirements	4
	5.3.2.2	Design, location and installation	4
	5.3.3	Propeller guards	4
	5.3.4	Bilge keels	4
	5.3.5	Tow hawsers	4
	5.3.6	Off-ship firefighting capability	4
	5.3.7	Off-ship dewatering capability	5
	5.3.8	Communications equipment	5
	5.3.9	Navigation equipment	5
	5.4	Type B - classic tug	5
	5.4.1	Configuration	5
	5.4.2	Performance characteristics	5
	5.4.3	Fendering	5
	5.4.4	Off-ship firefighting capability	6
	5.5	Type A - modern tug	6
	5.5.1	Configuration	6
	5.5.2	Performance characteristics	6

CONTENTS

			Page
Paragraph	5.5.2.1	Bollard pull classification	6
	5.5.3	Fendering	6
	5.5.4	Propulsion unit guards	6
	5.5.5	Skeg fendering	6
	5.5.6	Off-ship firefighting capability	6
	5.5.7	Off-ship dewatering capability	7
	5.5.8	Communications equipment	7
	5.5.9	Navigation equipment	7
	5.5.10	Hull fittings	7
	5.5.11	Deck machinery	7
	5.6	Towing operations	7
	5.6.1	Quantity of tugs	7
	5.6.2	Crew	8
	5.6.3	Training	8
	5.7	Quality assurance provisions	8
	5.7.1	General inspection	8
	5.7.2	Bollard pull testing	8
	5.7.3	Underwater fender inspection	9
	5.8	Response time	9
	6.	NOTES	10
	6.1	Intended use	10
	6.2	Issue of DODISS	10
	6.3	Tailoring guidance for contractual application	10
	6.4	NAVSEA approval and direction	10
	6.5	Subject term (key word) listing	10

FIGURE

Figure	1	General fendering arrangement	11
	2	Typical tug fendering	12
	3	Fendering support details	13
	4	Fendering section	14
	5	Submarine fendering	15
	6	Chine hull form fender detail	16
	7	Round bottom hull form fender detail	17
	8	Propeller guard fendering for twin screw tug	18
	9	Relationship between bow flare and tug pilot house	19
	10	Propulsion unit guard fendering	20
	11	Skeg fendering	21
	12	Aggregate bollard pull versus ship displacement	22

APPENDIX

Appendix	A	GLOSSARY OF TERMS	23
	B	APPLICATION AND TAILORING OF REQUIREMENTS	33

1. SCOPE

1.1 Purpose. The purpose of this document is to establish technical standards for contracting commercial tugs in order to perform tug services in response to the operational needs of U.S. Navy ships.

1.2 Objective. The main objective of this document is to establish acceptable commercial tug performance and outfitting requirements while maintaining maximum flexibility in order to satisfy diverse shiphandling and harbor requirements without unduly restricting tug selection.

1.3 Application. This document is applicable to all time charter and requirements type contracts in the United States or its possessions for all tug and towing services in the harbor, out to sea buoy or sea anchorages, and coastwise for U.S. Navy and Military Sealift Command (MSC) ships including commercial or foreign vessels chartered or sponsored by the Department of Defense (DoD), excluding spot hire services. This document may be used for guidance in contracting for tug and towing services in foreign ports.

2. APPLICABLE DOCUMENTS

2.1 Government documents.

2.1.1 Other Government documents, drawings, and publications. The following other Government documents, drawings, and publications form a part of this document to the extent specified herein. Unless otherwise specified, the issues are those cited in the solicitation.

PUBLICATIONS

CHIEF OF NAVAL OPERATIONS (CNO)
OPNAV FORM 2310-1 - Tugboat Hand and Whistle Commands.

(Applications for copies should be addressed to the Standardization Documents Order Desk, BLDG. 4D, 700 Robbins Avenue, Philadelphia, PA 19111-5094.)

DEPARTMENT OF TRANSPORTATION, U.S. COAST GUARD (USCG)
CODE OF FEDERAL REGULATIONS (CFR)
33CFR151, 155, and 159 - Navigation and Navigable Waters.
46CFR50-64, 90-97, 110-113, and 162 - Shipping.

(The Code of Federal Regulations (CFR) and the Federal Register (FR) are for sale on a subscription basis by the Superintendent of Documents, U.S. Government Printing Office, Washington, DC 20402. When indicated, reprints of certain regulations may be obtained from the Federal agency responsible for issuance thereof.)

3. DEFINITIONS

3.1 Definition of terms. Definition of terms used in this standard and other terms and expressions in common use in the towing and tug industry are as specified in appendix A.

4. GENERAL REQUIREMENTS

4.1 Regulation and certification. Tugs furnished under this standard for time charter contracts in U.S. harbors shall be U.S. registered, classed for tug service under a recognized classification agency, and be in accordance with applicable requirements of CFR 33, 151, 155, and 159; CFR 46, 50 through 64, 90 through 97, and 110 through 113; and shall comply with applicable local regulations which may be more restrictive than the CFR. Unless excepted (see 6.3), the requirements of this paragraph shall apply to requirements type contracts.

4.1.1 Bollard pull test certification. For time charter contracts, the bollard pull of each tug shall be verified upon inception of any contract which utilizes the tug. Each tug shall carry bollard pull certification from a recognized regulatory body and shall have proof of current compliance with bollard pull testing requirements specified in 5.3.1, 5.4.2, or 5.5.2.1. A valid recognized regulatory body certificate obtained within 18 months prior to contract signing will be acceptable as bollard pull verification. For requirements type contracts, bollard pull testing of one tug of each type is required.

4.1.1.1 Witnessing of bollard pull test. Bollard pull tests shall be witnessed by a recognized, independent, marine surveyor.

4.1.2 Use of Navy signals. Commercial tugmasters shall be proficient in the use of Navy signals as used between the harbor pilot and tugmasters in accordance with OPNAV FORM 2310-1.

4.2 Description of services.

4.2.1 General. Tug and towing services are required for the docking, undocking, mooring, towing, shifting, or other handling of surface ships, submarines, boats, barges, lighters, tugs, derricks, and other craft in the area specified. For drydocking, tugs will be used to position the ship at the drydock entrance where lines, with power assist where necessary, will be used for positioning the ship within the dock. Dead ship moves are included in addition to ships under power.

4.2.2 Submarines. Prior to any submarine handling operations, tugmasters and harbor pilot shall be in communication with the submarine commanding officer regarding submarine restricted areas, such as sonar dome, forward diving planes, stern planes, arrays, rudder, and propeller.

4.2.3 Miscellaneous services. Miscellaneous tug services will include at-sea transfer services using one or more tugs as ordered. These services consist of ferrying personnel or light cargo from an underway vessel to a dockside location, or from a dockside location to an underway vessel. Services may be required for the recovery of towed array systems and Naval training devices or to relocate camels, pollution control booms, work floats, and fenders. Tugs may be required as communications or security surveillance platforms, with Navy personnel aboard to perform these functions.

4.2.4 Emergency services. Emergency tug services may be required in response to accidents, fires, medical crises, weather, or similar events threatening harm to life or property, or requiring rapid response.

5. DETAILED REQUIREMENTS

5.1 General. Tugs shall provide the services required in this standard, including power, fendering, firefighting, communications, navigation, endurance, and maneuverability for handling the ships specified in the contract. Tugs furnished under this standard shall be properly manned, outfitted, and equipped for service as harbor tugs and shall be in a seaworthy condition. All tug hulls, machinery, and equipment shall be in efficient operating condition to perform these services. Tugs shall make up alongside the bow or stern of Navy ships without protrusion or obstruction from tug appurtenances that would interfere with or otherwise damage the hull of the vessel being assisted, except for normal hull-to-hull contact when protected by fenders. All tugs shall have a method for transferring pilots (or other personnel) between tug and ship when environmental conditions permit.

5.1.1 Waiver of requirements. Any tug requirement may be waived by the contracting activity if other means are available to satisfy the required service or specific requirements in this standard are not applicable to a particular facility or site.

5.2 Tug classification. The tug services and the related tug requirements shall be as specified in this standard, and, in part, by the Port Services Office seeking the service. The differing conditions at the various contracting sites and the differing needs for the variety of ships to be handled are managed by selecting tugs by type (and class if applicable). The quantity of tugs required is dependent upon the type of tug required. It is recommended that a mix of different types of tugs be specified in the solicitation in order to utilize the most economical tug combination for the required service.

(a) Type A is a modern tug with twin steerable propulsion units and has thrust capability in all directions as specified in 5.5. Type A tugs are recommended for all shiphandling operations, including the most difficult due to high currents, high winds, and tight harbor and pier situations. Type A tugs are subdivided into three classes as follows:

(1) Class I tugs have a propulsive power of approximately 4,000 brake horsepower (bhp) (2,983 kilowatts (kW)).
(2) Class II tugs have a propulsive power of approximately 3,000 bhp (2,237 kW).
(3) Class III tugs have a propulsive power of approximately 2,500 bhp (1,864 kW).

(b) Type B is a classic tug rated at approximately 2,000 bhp (1,491 kW), as specified in 5.4, and has maximum thrust capability in the forward direction. Type B tugs are recommended for most shiphandling operations where there are no severe environmental conditions.

(c) Type C is a minimum tug rated at approximately 1,000 bhp (746 kW), as specified in 5.3, and has maximum thrust capability in the forward direction. Type C tugs are recommended for handling of small ships (10,000 gross tons (9,843 metric tons) maximum), barges, small equipment, and miscellaneous services.

5.3 Type C - minimum tug. The following are minimum tug requirements for performing towing and tug services for handling U.S. Navy ships.

5.3.1 Performance characteristics. Each tug shall have a bollard pull of not less than 25,000 pounds (111,206 newtons (N)) in the ahead direction (approximately 1,000 bhp (746 kW)) (see 5.7.2).

5.3.2 Fendering.

5.3.2.1 Fendering requirements. Each tug shall have a fendering system around the bow and sides above the waterline. In addition, when specified (see 6.3), tugs shall have underwater side and bow fendering located and arranged to preclude any metal-to-metal contact between a submarine and the tug in any possible orientation to one another. Fendering shall be formed and attached to suit the hull form on which it is installed.

5.3.2.2 Design, location, and installation. Fendering location and installation shall be the responsibility of the contractor. Generally, design shall be as specified on figures 1 through 7. Sizing and location may vary, depending on the physical size of the tug.

5.3.3 Propeller guards. Tugs with twin screws shall be provided with guards for protection against tug propeller contact with the submarine. For guidance see figure 8.

5.3.4 Bilge keels. When underwater fendering is required, bilge keels (if fitted) shall be covered with rubber similar to the side fenders below the waterline, unless it can be shown that no contact between bilge keel and submarine will occur.

5.3.5 Tow hawsers. Each tug shall provide a sufficient quantity of hawsers and of such length, strength, and material to perform all shiphandling and towing functions as required herein. In addition, spare hawsers shall be carried onboard each tug to replace worn or damaged lines.

5.3.6 Off-ship firef ghting capability. When specified (see 6.3), each tug shall have a fire pump car city of not less than 1,000 gallons per minute (gal/min) (63.08 liters pe second (L/s)) at 125 pounds per square inch (lb/in^2) (862 kilopascals (kPa)) g ge on board. Portable pumps placed on deck may be utilized. Each tug shall ve the capability of attaching the pump discharge (when required) to the de connection of the firemain of the ship under tow, and still be connected to a f hose with nozzle on the tug. This fire hose and nozzle may be the tug's c firefighting equipment. This connection shall be 1-1/2 inch NPSH or Interr onal Shore Connection in accordance with 46CFR162.034.

5.3.7 Off-ship dewatering capability. When specified (see 6.3), at least one tug in each shiphandling operation shall carry a portable, submersible, dewatering pump rated at not less than 250 gal/min (15.77 L/s) at 50 lb/in^2 (345 kPa) gauge with 100 feet (32.8 meters (m)) of discharge hose and 100 feet (32.8 m) of waterproof power cable. An equivalent system will be acceptable.

5.3.8 Communications equipment. In addition to equipment required by the United States Coast Guard (USCG), or provided by the contracting activity, each tug shall be equipped with the following minimum communications capability.

(a) Two very high frequency (VHF) transceivers.
(b) When specified (see 6.3), one high frequency (HF) voice-communication system (harbor communications) with a frequency range of not less than 2 to 30 megahertz (Mhz) and with an output of not less than 100 watts.

The above requirements are not intended to restrict the utilization of the on board radio equipment for normal communications on other assigned or required radio frequencies.

5.3.9 Navigation equipment. In addition to equipment required by the USCG, each tug shall be equipped with one magnetic compass and, when specified (see 6.3), the following additional navigational equipment:

(a) One marine gyro compass.
(b) One marine radar, gyro stabilized.
(c) One fathometer.

5.4 Type B - classic tug. In addition to the requirements specified in 5.3 for the Type C minimum tug, Type B tugs shall meet the following requirements:

5.4.1 Configuration. Type B tugs shall be configured so that the pilot house is narrow in relation to the main deck breadth to facilitate working at the bow or stern of ships with a pronounced flare, including the bow or quarter of an aircraft carrier. For specific ports and situations, when specified (see 6.3), the tug's pilot house shall conform to the dimensions given on figure 9. The mast must be able to be folded in order to work in tight overhead situations.

5.4.2 Performance characteristics. Type B tugs shall have a bollard pull of not less than 40,000 pounds (177,929 N) in the ahead direction (approximately 2,000 bhp (1,491 kW)) (see 5.7.2). Each tug shall maintain 11 knots continuous speed with the tug operating not greater than 80 percent of its full horsepower, in transit with no tow. Each tug shall have a range of not less than 500 miles (805 kilometers (km)) at 10 knots.

5.4.3 Fendering. Rubber bow fenders shall be tightly fitted to each other and scarfed where required to prevent gaps from forming, thereby negating the effectiveness of the fenders. Layers of vertical and horizontal fenders are preferred. Above water rubber fenders shall be non-marking. When specified (see 6.3), tugs shall employ fixed or portable bucket fenders on the boat deck to

ensure that ships and tugs are not damaged. These fenders may be foam filled or of equivalent design. See figure 9 for guidance. Above water and underwater fendering equivalent to that shown on figures 1 through 7 may be accepted (see 6.4).

5.4.4 Off-ship firefighting capability. When fire pump is specified (see 6.3), each tug shall also have, when specified (see 6.3), a not less than 500 gal/min (31.54 L/s) injected foam capability (with 150 gallon (568 liter (L)) foam tank) on board. Portable equipment placed on deck may be utilized.

5.5 Type A - modern tug. In addition to the requirements specified in 5.4 for the Type B classic tug, Type A tugs shall meet the following requirements:

5.5.1 Configuration. On Type A tugs, twin propulsion units shall have omni-directional steering which affords towing control in any direction.

5.5.2 Performance characteristics. Type A tugs shall have the performance characteristics specified below.

5.5.2.1 Bollard pull classification. Tugs utilized for services specified under Type A shall be classified according to bollard pull as follows (see 5.7.2):

(a) Class I tugs (approximately 4,000 bhp (2,983 kW)). Bollard pull shall be not less than 100,000 pounds (444,822 N) ahead, 85,000 pounds (378,099 N) astern, and 70,000 pounds (311,376 N) side thrust.

(b) Class II tugs (approximately 3,000 bhp (2,237 kW)). Bollard pull shall be not less than 70,000 pounds (311,376 N) ahead, 60,000 pounds (266,893 N) astern, and 50,000 pounds (222,411 N) side thrust.

(c) Class III tugs (approximately 2,500 bhp (1,864 kW)). Bollard pull shall be not less than 55,000 pounds (244,652 N) ahead, 45,000 pounds (200,170 N) astern, and 35,000 pounds (155,688 N) side thrust.

5.5.3 Fendering. Tugs which operate in the astern direction when ship-handling, shall have stern fenders functionally equivalent to bow fenders on ahead operating tugs.

5.5.4 Propulsion unit guards. When specified (see 6.3), tractor tugs and stern drive steerable propeller tugs with twin side-by-side drives shall be provided with fendering for preventing metal-to-metal contact between the tug's propulsion guards and the submarine hull surface. For general guidance see figure 10.

5.5.5 Skeg fendering. The aft edge of the tug skeg (if fitted) shall be fendered with shaped rubber. See figure 11 for guidance.

5.5.6 Off-ship firefighting capability. Each Type A tug shall have a fire pump capacity of not less than 1,000 gal/min (63.08 L/s) at 125 lb/in^2 (862 kPa) gauge with not less than 500 gal/min (31.54 L/s) injected foam capability (with 150 gallon (568 L) foam tank) on board. Portable pumps placed on deck may be

utilized. Each tug shall have the capability of attaching the pump discharge to the deck connection of the firemain of the ship under tow, and still be connected to a fire hose with nozzle on the tug. This fire hose and nozzle may be the tug's own firefighting equipment. This connection shall be 1-1/2 inch ~~(38.1 mm)~~ NPSH or International Shore Connection in accordance with 46CFR162.034. Each tug shall have not less than one fire monitor rated 1000 gal/min (63.08 L/s) at 100 lb/in^2 (689 kPa) gauge with injected foam capability.

5.5.7 Off-ship dewatering capability. At least one tug in each shiphandling operation shall carry a portable submersible dewatering pump rated not less than 250 gal/min (15.77 L/s) at 50 lb/in^2 (345 kPa) gauge with 100 feet (32.8 m) of discharge hose and 100 feet (32.8 m) of waterproof power cable. An equivalent system will be acceptable.

5.5.8 Communications equipment. Each tug shall be equipped with one HF voice-communication system (harbor communications) with a frequency range of not less than 2 to 30 MHz and with an output of not less than 100 watts.

5.5.9 Navigation equipment. Each tug shall be equipped with one fathometer, one gyro compass, and one gyro stabilized marine radar.

5.5.10 Hull fittings. The deck layout of Type A tugs shall conform to the general description herein. Equivalent capability will be accepted based upon evidence of compliance with the intent of this paragraph (see 6.4). Bitts and chocks shall be maintained in good working condition.

(a) The deck arrangement shall have either a cruciform bitt or bullnose forward to lead the tug's headline or springline. The bullnose opening shall be sufficiently large to allow the eye and splice of working lines to pass easily through. A cruciform bitt shall be sufficiently large to accommodate one or two wraps of one or two lines of the largest hawser used.

(b) An H-bitt shall be located on the fore deck to belay the working lines.

(c) Forward quarter bitts shall be located just forward of the deck house, port and starboard. An H-bitt shall be located aft of the deck house, set athwartships, well forward of the stern, for towing, with after quarter bitts just aft of the deckhouse.

5.5.11 Deck machinery. Capstans or winches with gypsy heads shall be provided forward and aft for handling lines 6-1/2 inch (165 mm) circumference and larger.

5.6 Towing operations.

5.6.1 Quantity of tugs. A sufficient number of tugs shall be supplied for each tug service required. The contracting activity will specify the quantity and the type of tugs to suit local handling and towing requirements (see 6.3). The quantity of tugs required for each operation is largely a function of the aggregate bollard pull required to move the ship under control. The aggregate bollard pull required for each operation will vary depending upon ship displacement, draft, size, docking position, and proximity to other ships (docked or

moving), and the vagaries of weather, currents, tides, and topography in a given harbor. Figure 12 is a curve of aggregate bollard pull versus ship displacement which provides guidance for the aggregate bollard pull based on the number of tugs that have been used in the past to handle various Navy ships. Local commands may determine, based on experience, that more or fewer tugs are required to handle a particular ship.

5.6.2 Crew. The contractor is responsible for supplying a full and efficient complement for each tug, consisting of a tugmaster and crew trained and experienced in towing and shiphandling and in operating all of the tug's equipment. Tugs without forward and aft bridge-controlled powered winches shall have a minimum of two deck hands for line-handling. The tugmaster and entire crew shall be U.S. citizens and possess valid and current certificates and documents.

5.6.3 Training. When specified (see 6.3), tug crew training shall be provided for familiarization with local environment and Navy shiphandling procedures.

5.7 Quality assurance provisions.

5.7.1 General inspection. The tug and associated equipment shall be subject to the Government's inspection as to suitability for the required service prior to delivery and to subsequent inspections at any time during the course of the contract to determine whether the material condition of the tug and associated equipment is adequate for effective operation. Should the inspection uncover deficiencies, the contractor is responsible for correction of these deficiencies within a reasonable time. If any deficiencies exist, the tug shall not be used until corrections are made. Such inspections will include:

(a) Configuration and condition of the fendering system.
(b) Condition and operability of navigation and communications equipment and provision of appropriate technical manuals and onboard spares.
(c) Condition (tightness and preservation) of hull, deck plating, and superstructure, and the operability of deck machinery.
(d) General material condition and maintenance of the tug.
(e) Condition, operability, and certification of required safety and firefighting equipment.
(f) Operability and safety of engineering spaces and equipment.
(g) Operability and condition of pollution control devices.
(h) Condition and operability of all hawsers and other towing gear.
(i) USCG documentation and licensing of vessel and crew.

5.7.2 Bollard pull testing. A bollard pull test is required for each tug that does not possess a valid current bollard pull certificate (see 4.1.1). Bollard pull testing, when required, shall be as specified in the following procedures:

(a) The main engines shall be run at the rated power (80 percent of maximum continuous output).
(b) The propellers fitted when performing the test shall be the propellers used when the vessel is in normal operation.
(c) All auxiliary equipment such as pumps, generators and other equipment which are driven from the main engines or propeller shafts in normal operation of the vessel shall be connected and loaded to normal operating conditions during the test.
(d) The length of the test line shall be so that the vessel is at least 100 feet (32.8 m) from the shoreline (dock).
(e) The minimum water depth at the test location shall be 40 feet (13.1 m).
(f) The test shall be carried out with the tug's displacement corresponding to full ballast and full fuel capacity.
(g) The tug shall be trimmed at even keel or at a trim by the stern not greater than 1 percent of the tug's length.
(h) The test shall be performed with a wind speed not greater than 10 knots.
(i) The current at the test location shall be not greater than 1 knot in any direction.
(j) A calibrated dynamometer or load cell shall be used for the test. Calibration shall be by a recognized testing laboratory within the last year. The accuracy of the measurement shall be plus or minus 2 percent. The maximum reading on the scale shall be no more than 75 percent above the required bollard pull.
(k) The test shall be run continuously for a minimum of 30 minutes in the ahead direction and, for Type A tugs, 15 minutes in the astern and athwartship directions. Instrument readings shall be taken every five minutes. The average of all the readings shall satisfy the bollard pull requirements of 5.3.1, 5.4.2, or 5.5.2.1. No single reading shall be greater than 10 percent below the requirements.
(l) The test line and dynamometer (or load cell) shall be connected between a bitt on the tug and a suitable bollard on the dock. The strength of the bollard on the dock shall be adequate for the test.

5.7.3 Underwater fender inspection. The Contractor shall provide evidence of tug to submarine fender protection adequacy. A partial cross section template, consisting of a 16-foot (5.25 m) radius sector and representing the smallest size submarine to be encountered, shall be made up and applied normal to the hull of each tug at the part of the tug that would be contacted with the submarine surfaced. This test shall be applied at four locations; at the bow, at the forward quarter, amidships, and in-line with the propulsion unit.

5.8 Response time. Response time shall be as specified (see 6.3). The time required for tugs to be fully crewed and ready for service after notification is given to the contractor will vary greatly depending upon the requesting activity. Different response times may be specified by the contracting activity for a specified number of tugs for normal operations and for emergency operations.

6. NOTES

(This section contains information of a general or explanatory nature that may be helpful, but is not mandatory.)

6.1 Intended use. It is intended that this standard be used for direct reference in contracts for commercial tug services. The intent is to set forth the requirements and conditions within which the tug must operate satisfactorily. These tug services shall include shiphandling of Navy ships and submarines and the towage of miscellaneous vessels, craft, and objects of any nature including appurtenances carried thereon, as well as certain other services, all in accordance with the requirements set forth in this Standard and the applicable acquisition documents.

6.2 Issue of DODISS. When this standard is used in acquisition, the applicable issue of the DODISS must be cited in the solicitation (see 2.1.1 and 2.2).

6.3 Tailoring guidance for contractual application. Tailoring guidance is contained in appendix B.

6.4 NAVSEA approval and direction. Deviations from specified materials, procedures, and requirements and selection of specific alternative materials and procedures require NAVSEA approval or direction. Requests should include supporting documentation.

6.5 Subject term (key word) listing.

At-sea transfer
Bollard pull
Docking
Mooring
Shifting
Towing
Tugmaster
Undocking

Preparing activity:
Navy - SH
(Project 1925-N010)

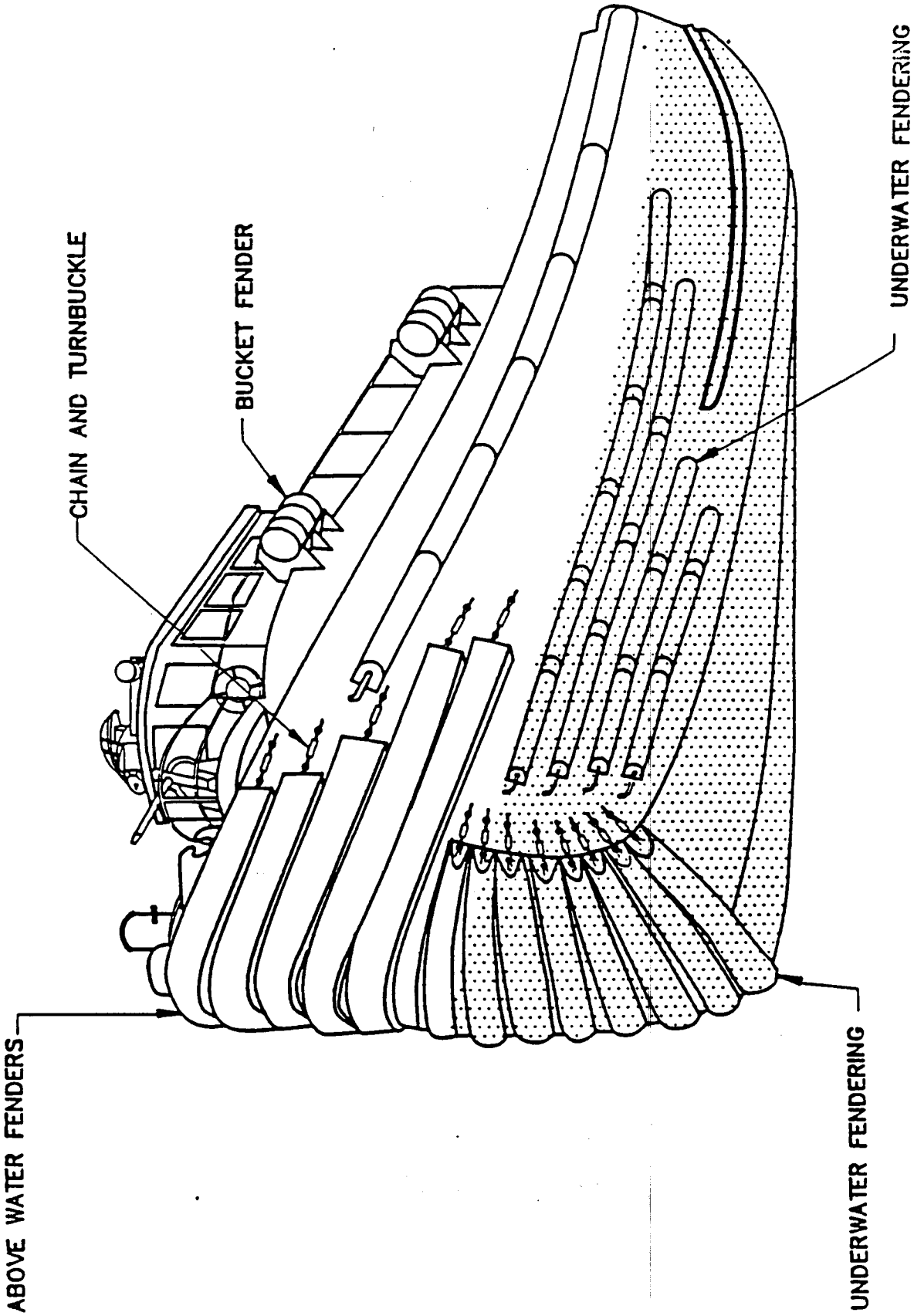

FIGURE 1. General fendering arrangement.

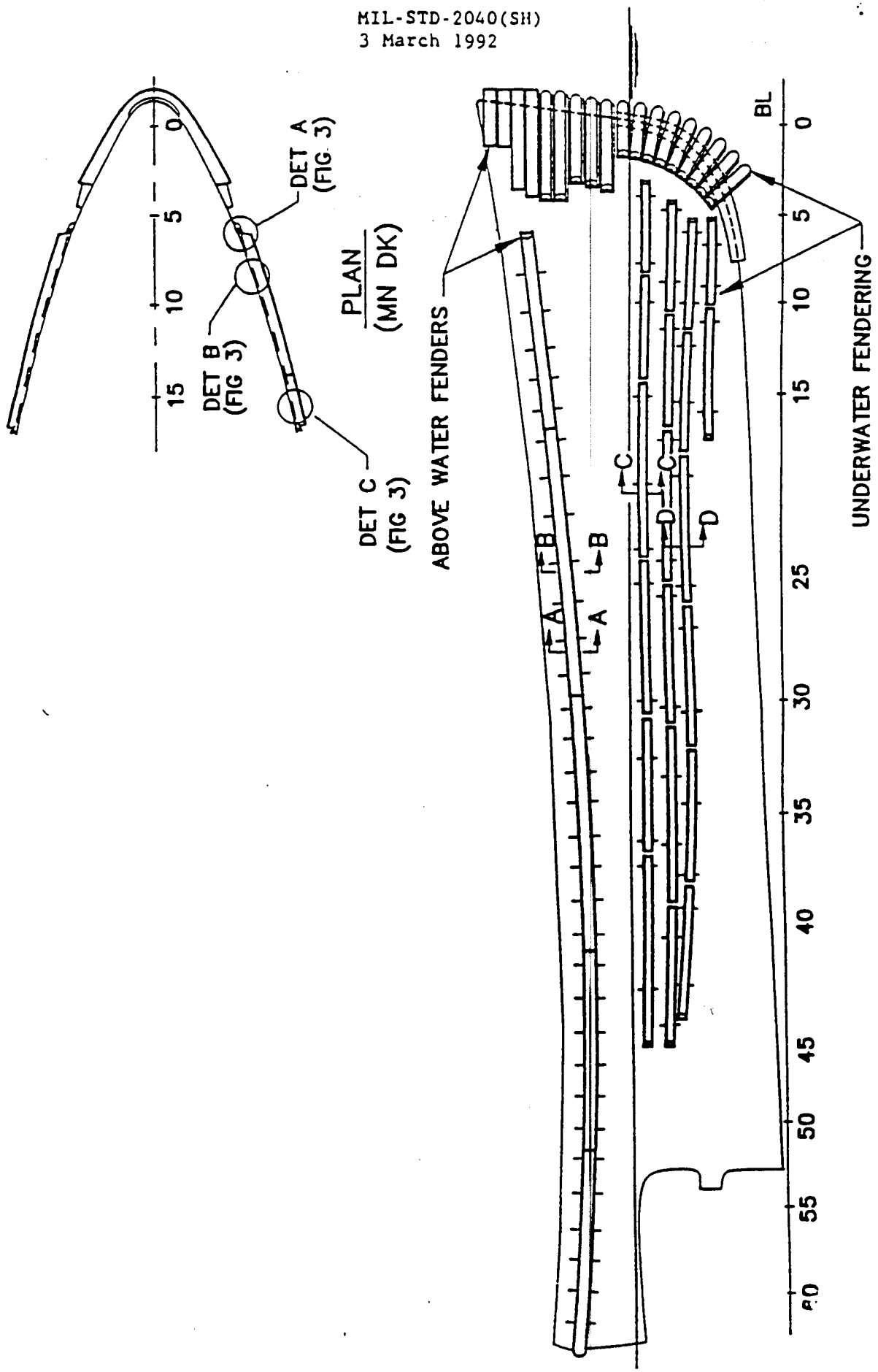

FIGURE 2. Typical tug fendering.

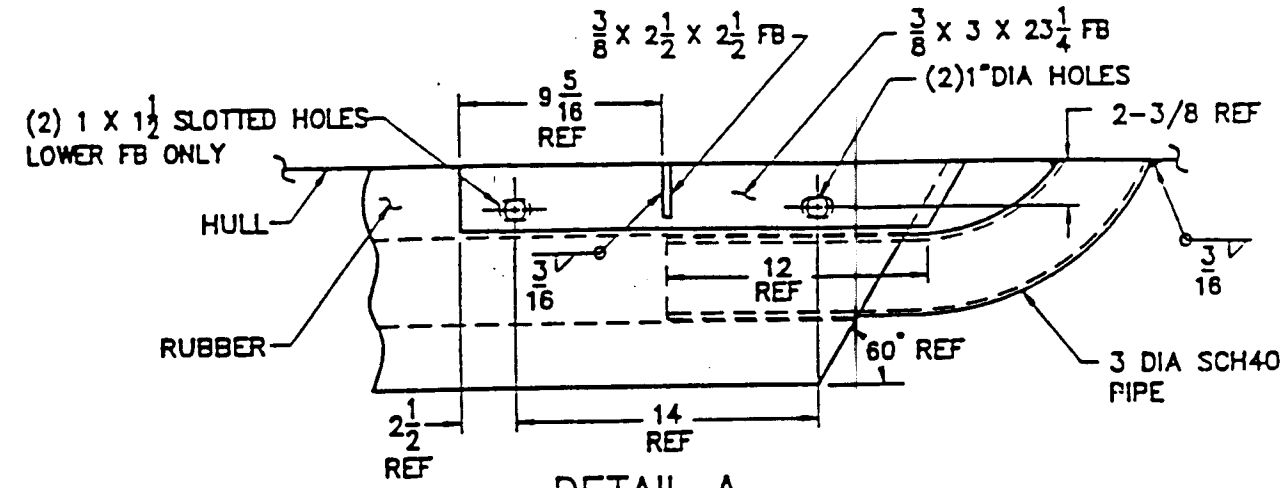

DETAIL A
FWD END

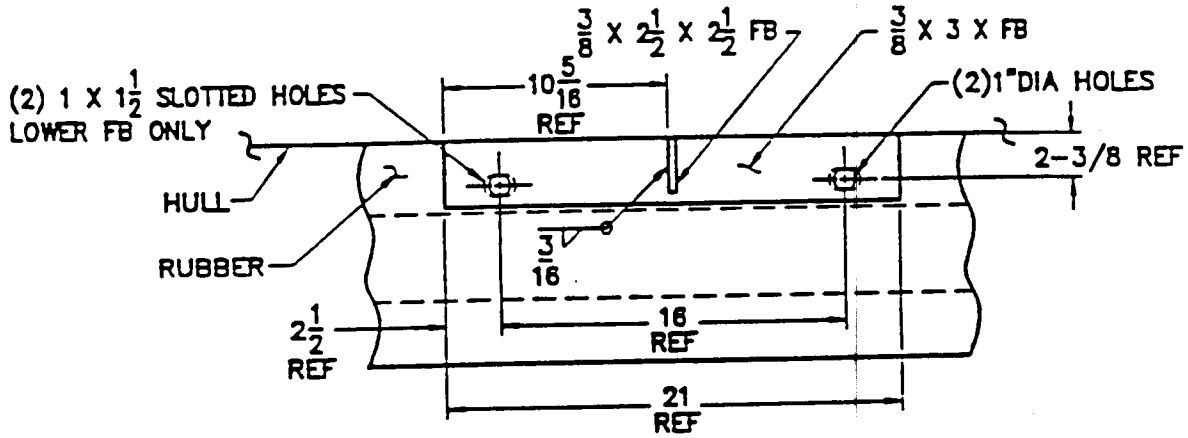

DETAIL B
TYPICAL MID-SECTION

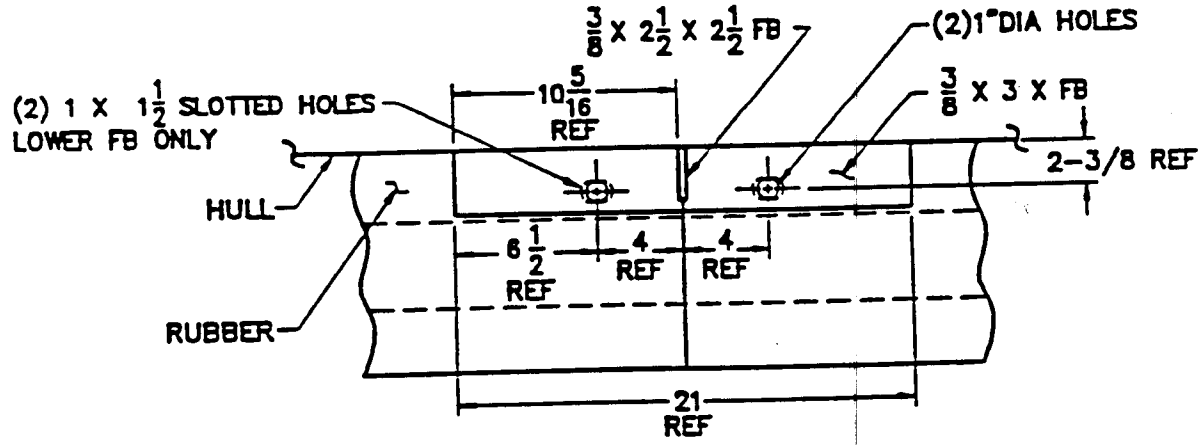

DETAIL C
SPLICE

(NOTE: 1" = 25.4 mm)

FIGURE 3. Fendering support details.

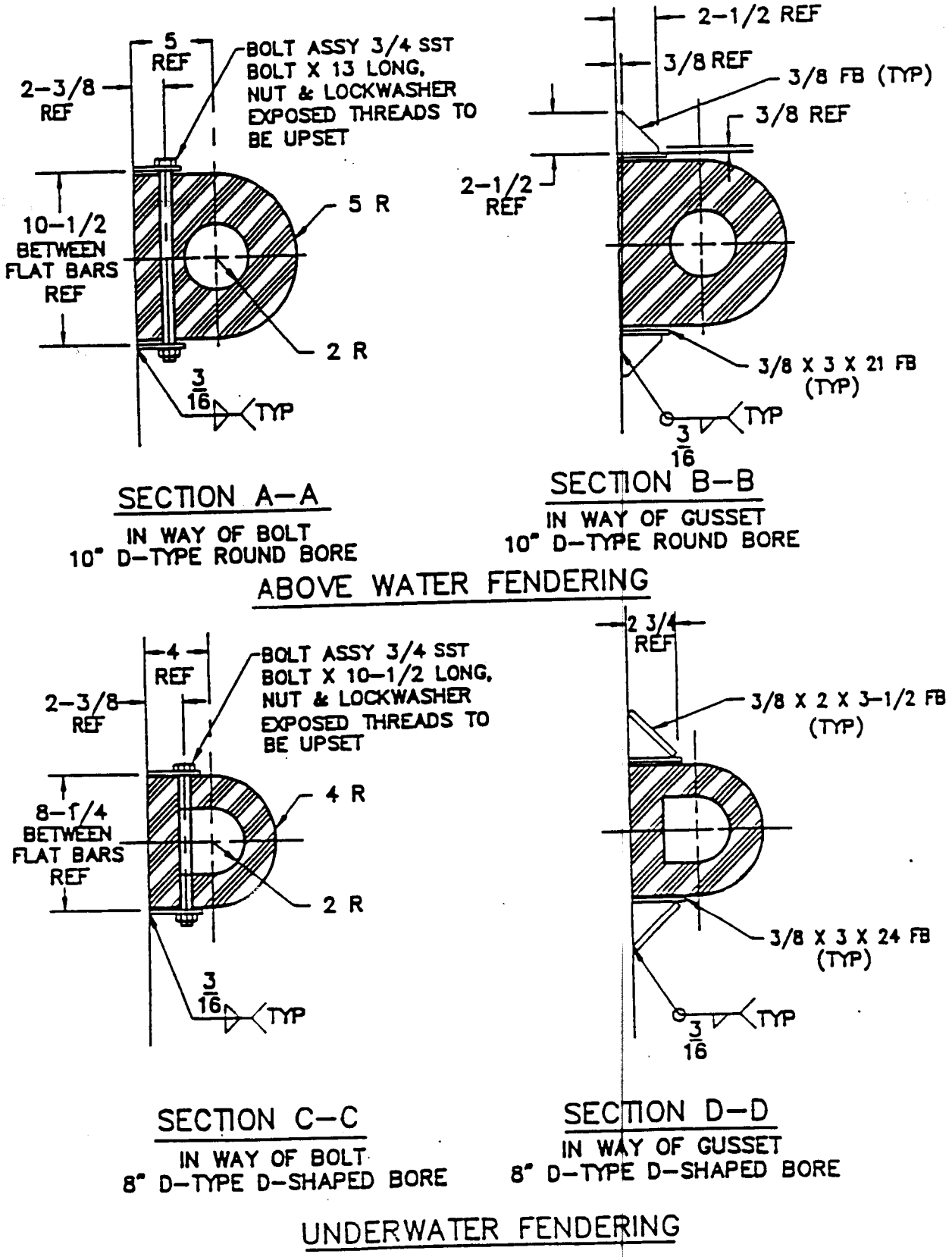

(NOTE: 1" = 25.4 mm)

FIGURE 4. Fendering section.

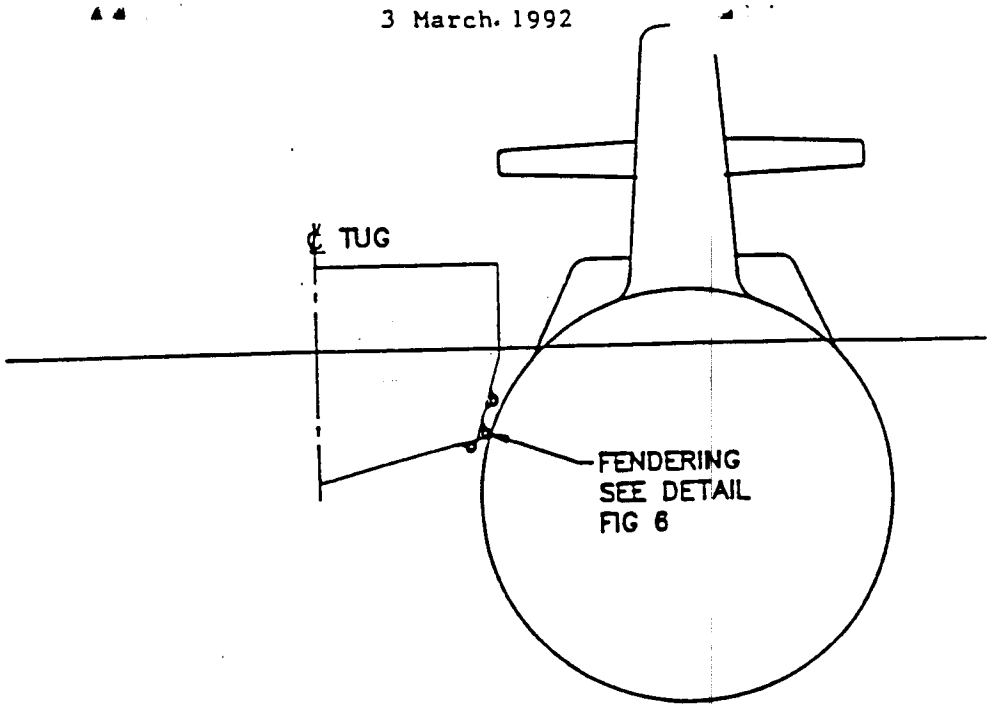

CHINE HULL FORM

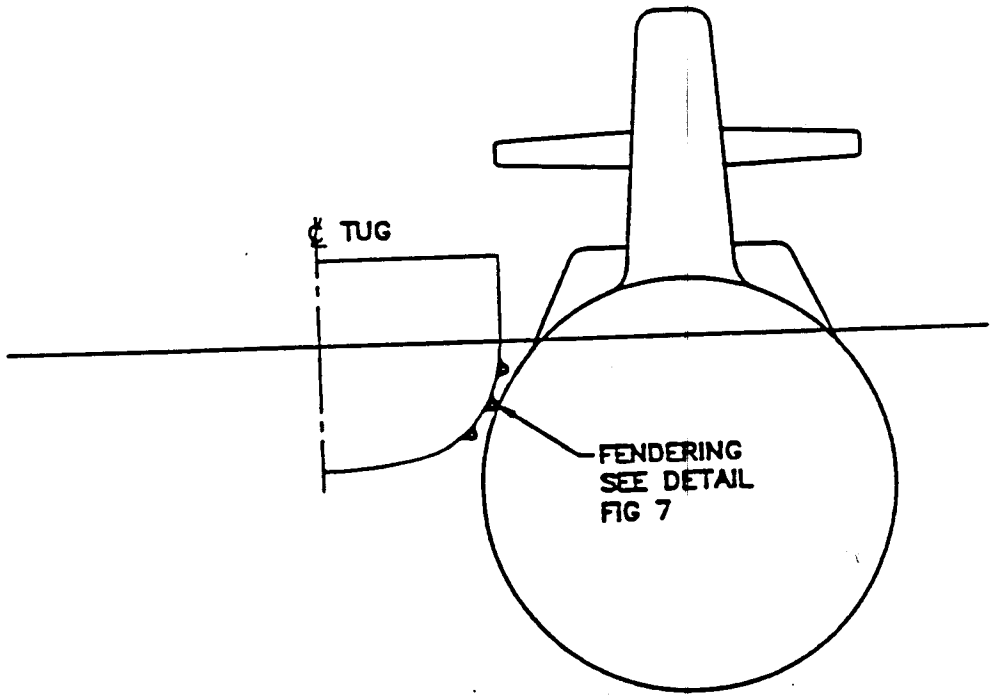

ROUND BOTTOM HULL FORM

FIGURE 5. Submarine fendering.

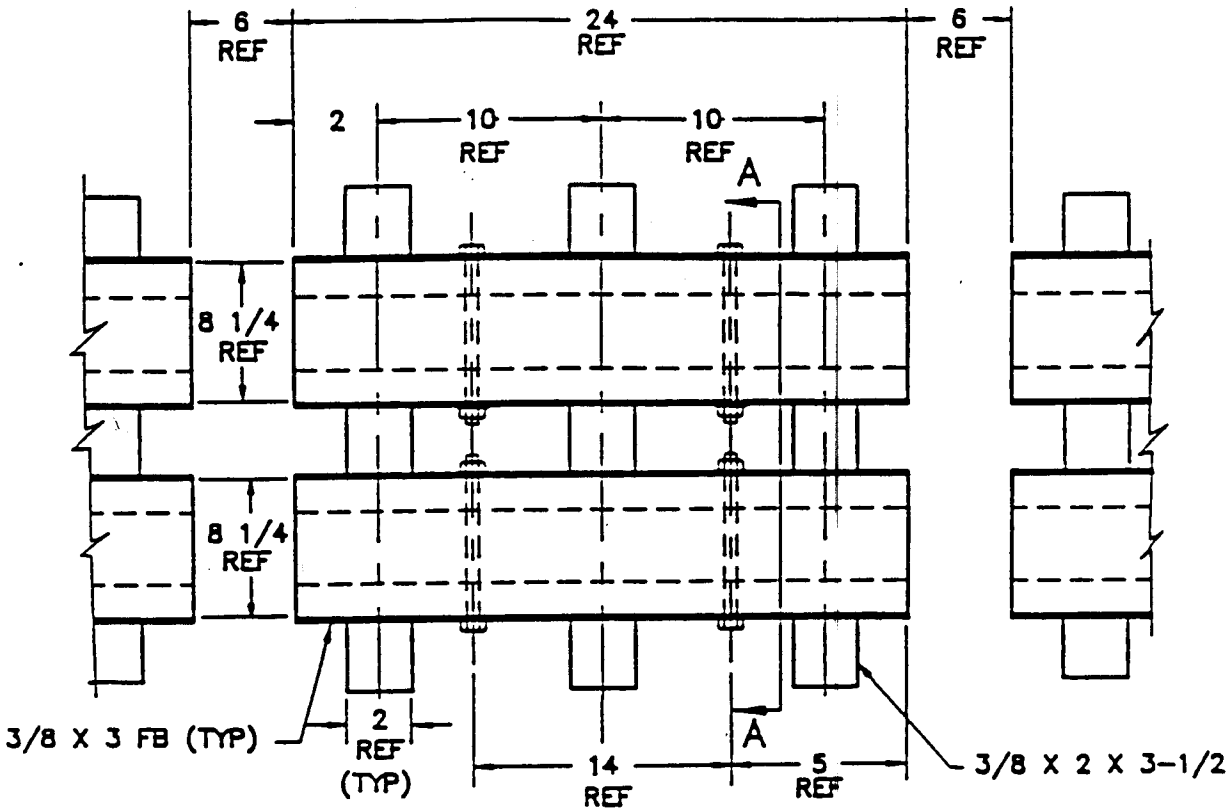

NOTE: LOWER FENDER ROTATED FOR CLARITY.

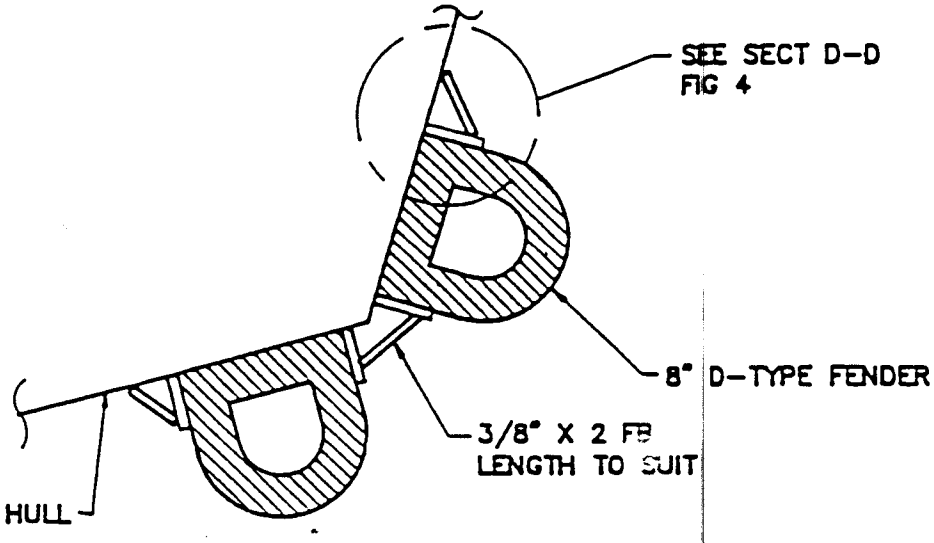

NOTE: CONTINUOUS WELDING OF UPPER AND LOWER BAR OF EACH ASSEMBLY-3" LONG WELD ON 8" CENTERS ON INSIDE OF EACH BAR.

SECTION A-A

(NOTE: 1" - 25.4 mm)

FIGURE 6. Chine hull form fender detail.

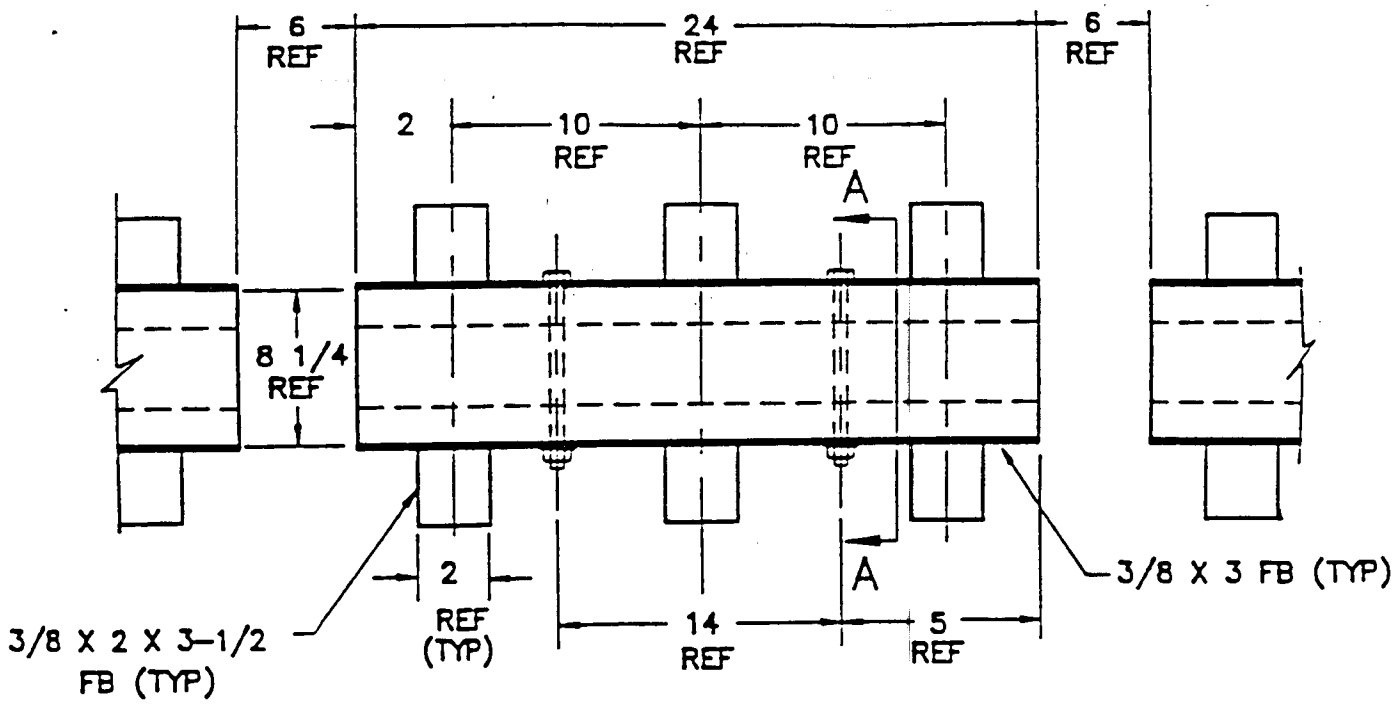

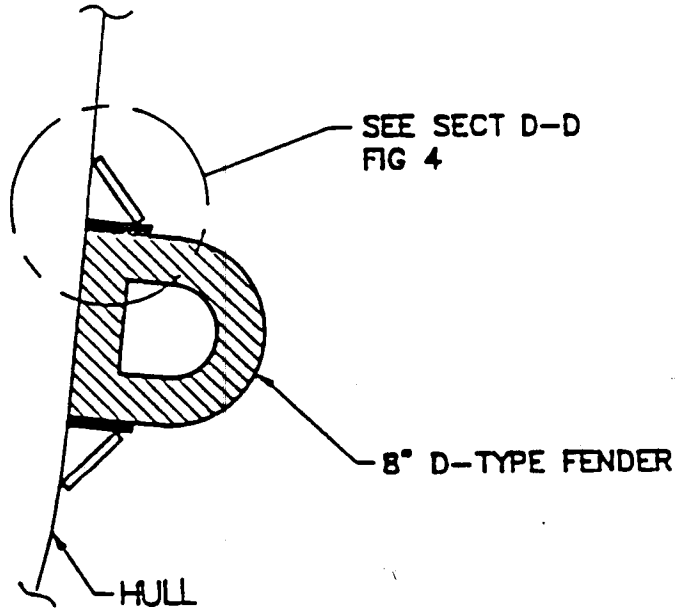

NOTE: CONTINUOUS WELDING OF UPPER AND LOWER BAR OF EACH ASSEMBLY. 3" LONG WELD ON 8" CENTERS ON INSIDE OF EACH BAR.

SECTION A-A

(NOTE: 1" = 25.4 mm)

FIGURE 7. Round bottom hull form fender detail.

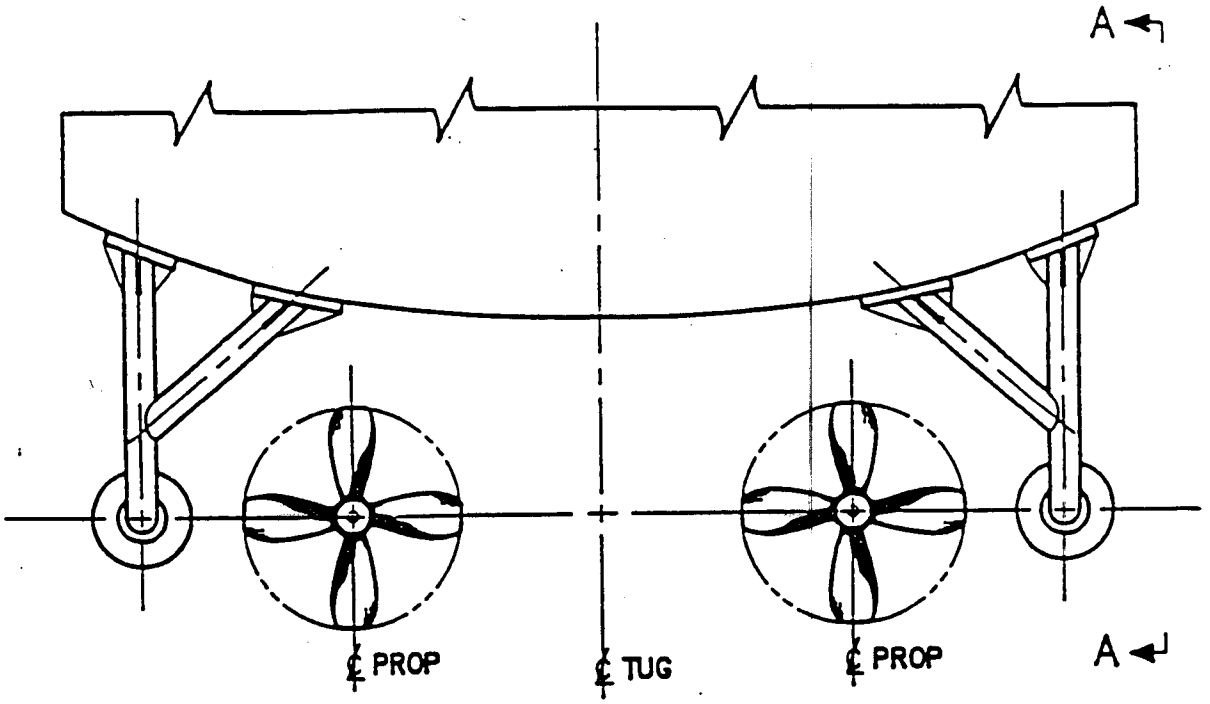

VIEW LKG FWD

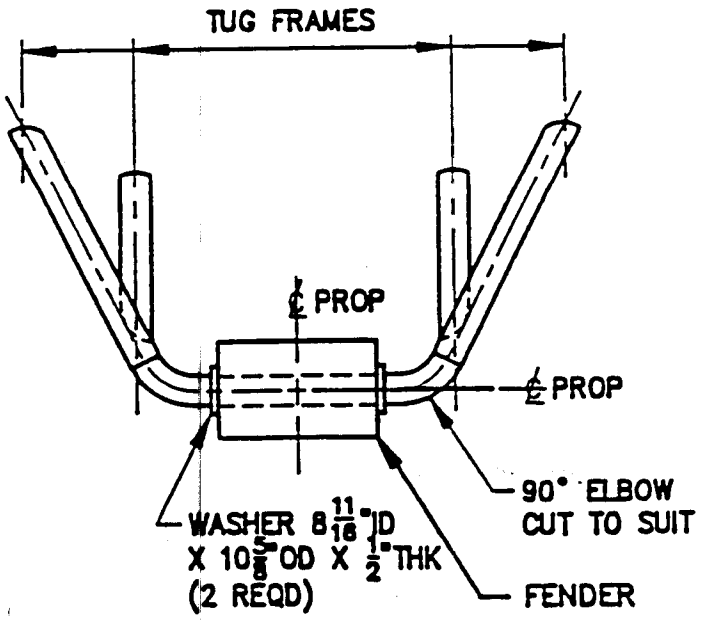

VIEW A–A

NOTES:

1. ALL STEEL PIPE TO BE 8" SCHEDULE 80
2. ALL WELDING TO BE 100 PERCENT
3. FENDER – UNIROYAL OR EQUAL (CYLINDRICAL 18"OD X 9"ID X 36"LONG)
4. ALL PLATES AND BRACKETS TO BE 1/2"PL

(NOTE: 1" = 25.4 mm)

FIGURE 8. Propeller guard fendering for twin propeller tug.

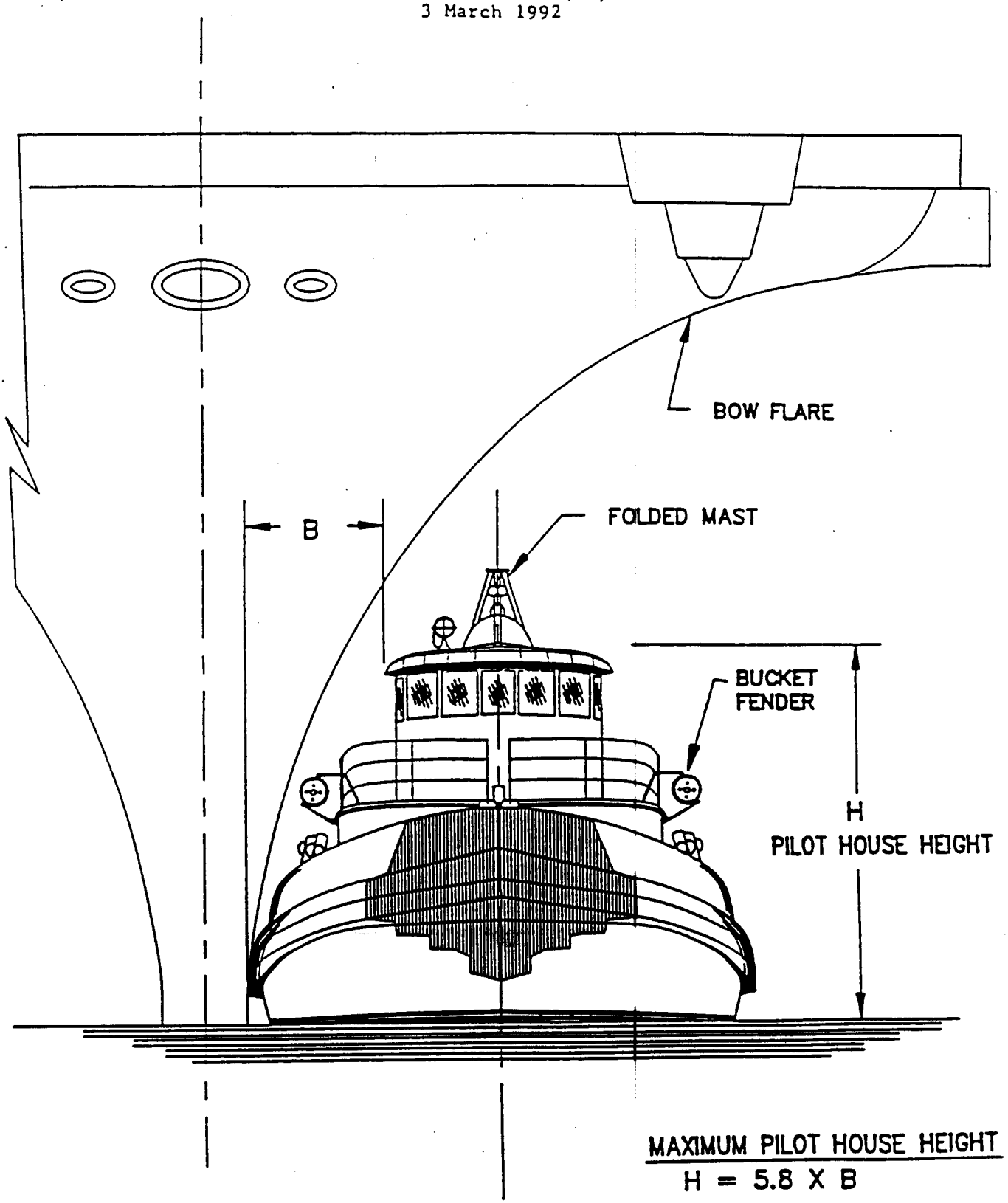

FIGURE 9. Relationship between bow flare and tug pilot house.

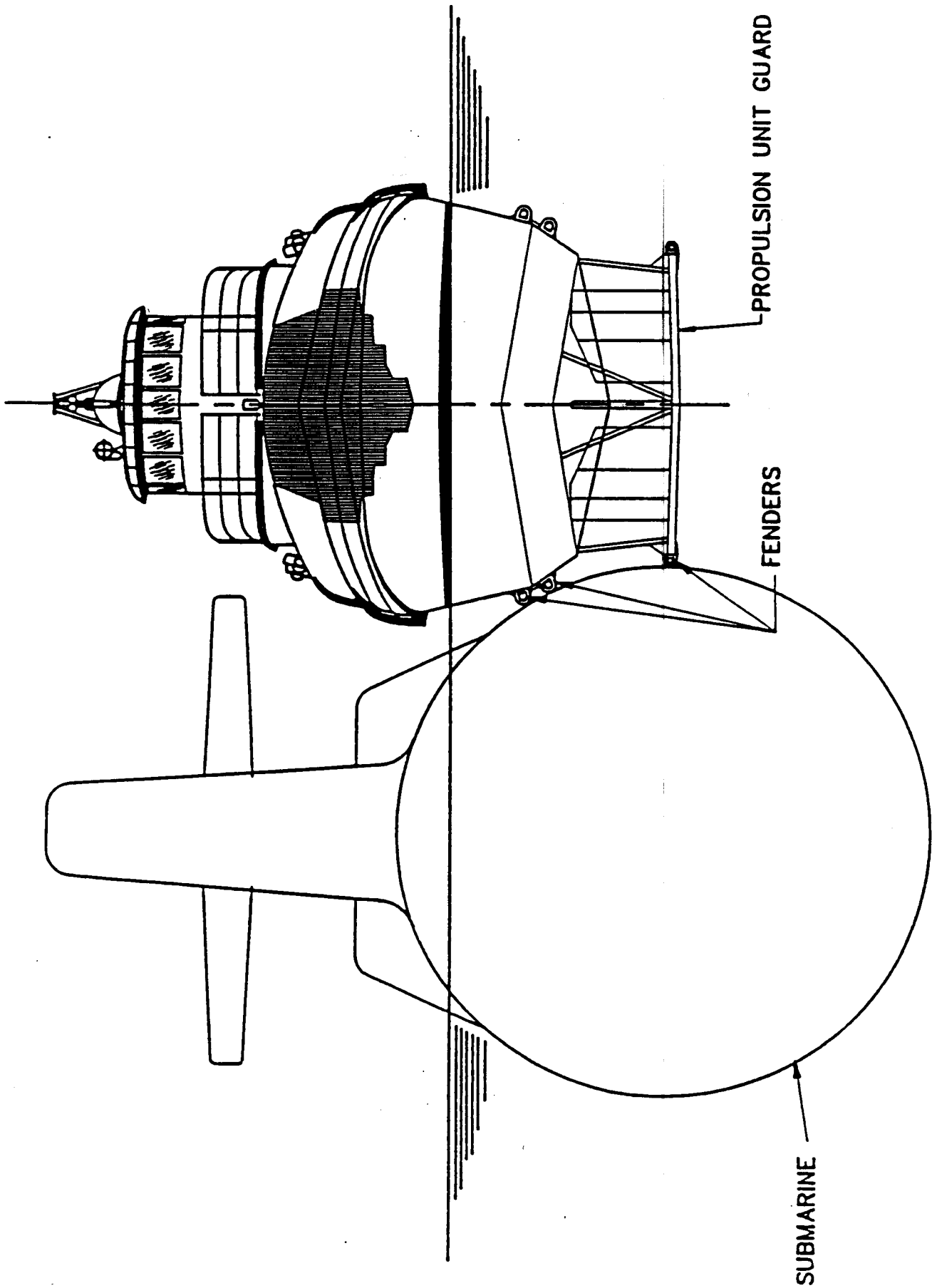

FIGURE 10. Propulsion unit guard fendering.

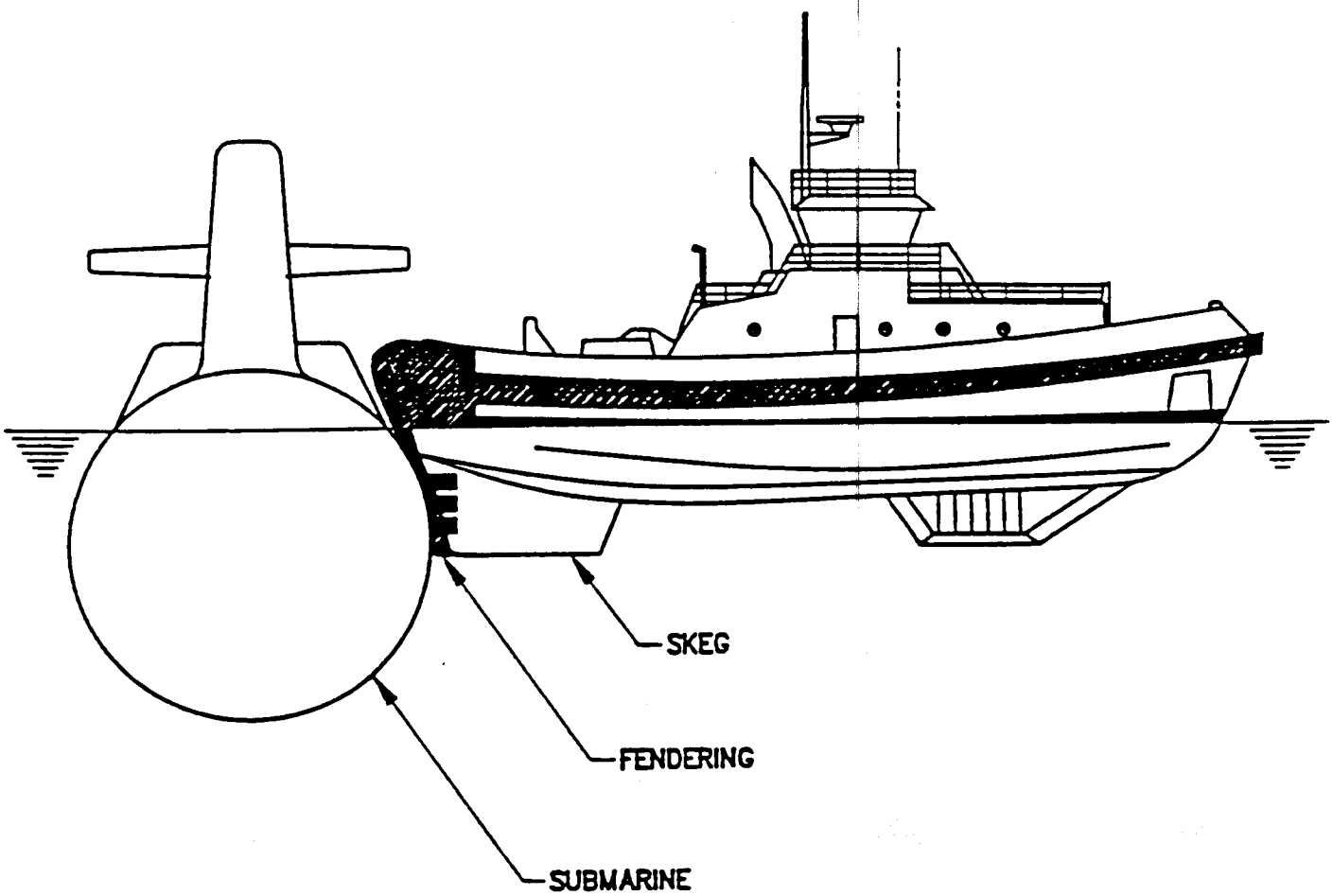

FIGURE 11. Skeg fendering.

Notes:

1. This figure provides guidance for the aggregate bollard pull based on the number of tugs that have been used in the past to handle U.S. Navy ships.

2. The aggregate bollard pull required for each move varies depending on ship displacement, draft, size and harbor conditions.

3. Local commands may determine, based on experience, that more or fewer tugs are required to handle a particular ship.

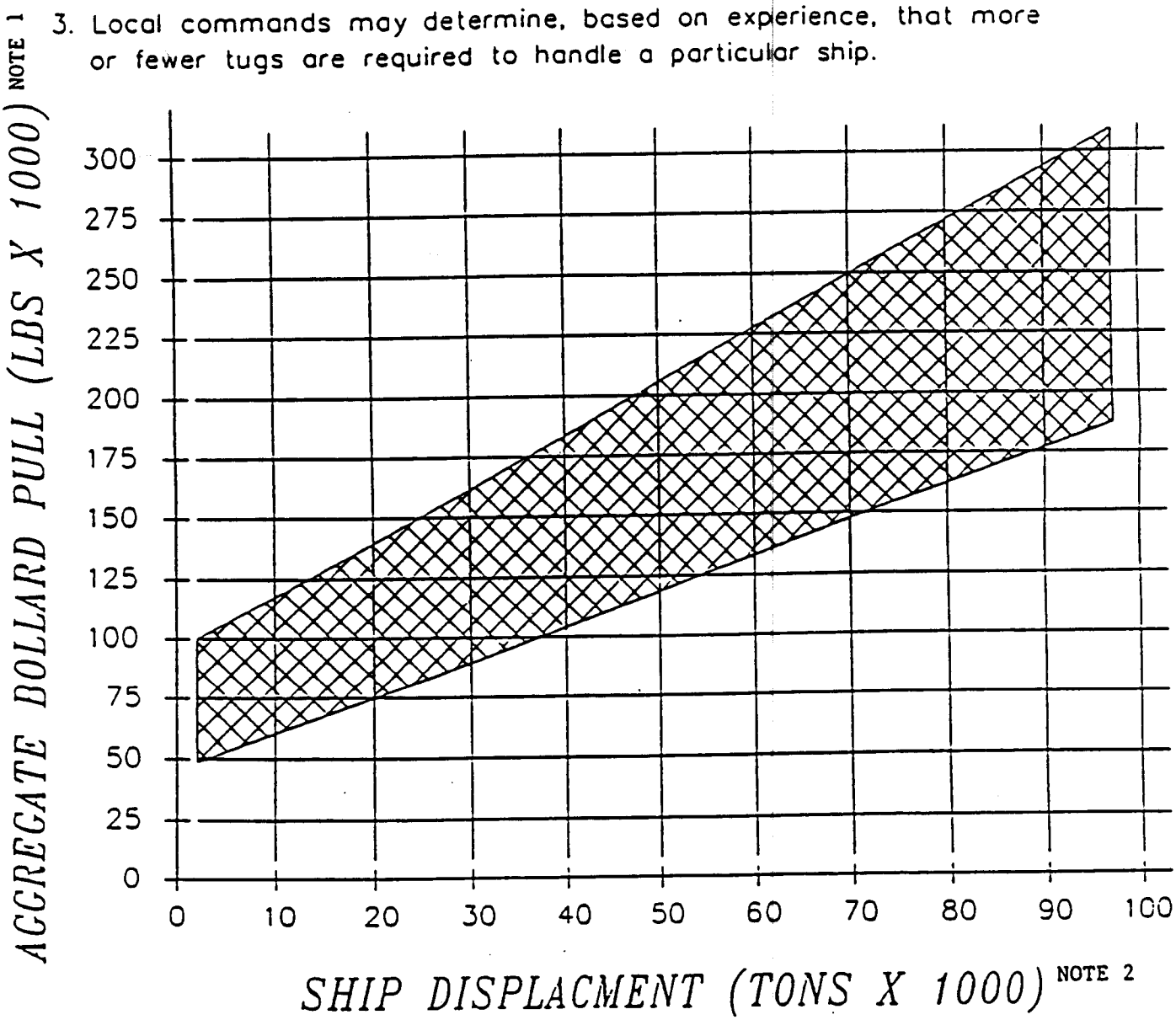

(NOTE 1: Multiply by 4.448 to get kilonewtons (kN).)
(NOTE 2: Divide by 1.016 to get metric tons.)

FIGURE 12. Aggregate bollard pull versus ship displacement.

APPENDIX A

GLOSSARY OF TERMS

10. SCOPE

10.1 Scope. The following glossary of terms is a compilation of terms and expressions used within this text and those of common use in the tug and towing industry. They are presented to facilitate comprehension of this specialized industry. This appendix is not a mandatory part of the standard. The information contained herein is intended for guidance only.

20. APPLICABLE DOCUMENTS

This section is not applicable to this appendix.

30. TERMS

30.1 Aggregate bollard pull. The total pulling power required of all tugs to handle a given ship in a specific situation.

30.2 Alongside "Chinese". Denotes that two ships are alongside one another in such a manner that the stern of one is facing in the same direction as the bow of the other.

30.3 Bar. That section at the entrance to ports which is more shallow than the ocean or waterway and must be carefully crossed.

30.4 Bar-tight. Solid and rigid as a steel bar.

30.5 Barrel. The rotating drum of a capstan or winch.

30.6 Beam ends. Occurs when a vessel is hove over or listed until her deck beams approach vertical.

30.7 Beam sea. A sea that runs athwart the vessel's course.

30.8 Beam wind. A wind that blows athwart the vessel's course.

30.9 Bear down. To approach the target.

30.10 Beaufort scale. A numerical and descriptive scale of wind velocities and sea conditions.

30.11 Beckets. Rope or wooden appliances used to hold hand steering wheels on small tugs.

30.12 Bilge keel. Finlike projections on either side of the bottom of a tug's hull to decrease rolling.

30.13 Birdcaging. The spreading out of wires in wire rope around the full diameter of rope with resulting kinks in the wires. This can occur when there is a sudden release of a heavy load on a wire rope.

30.14 Bitts.

30.14.1 Forward bitts. Any single, double, or triple arrangement for the fastening of lines on the tug's bow.

30.14.2 Side bitts or quarter bitts. Bitts built into bulwark rails on either side of the tug about one-quarter of the way from the stem, and approximately even with the after H-bitts or towing winch. These are used in mooring and towing alongside. (Shoulder post is British terminology.)

30.14.3 H-bitts. The heavy double posts joined by a cavel, forming a letter H. These are located at the tug's stern and are used for securing any heavy lines.

30.15 Bollard. Single cast-steel posts secured to a wharf or pier and used for mooring vessels by means of lines extending from the vessel.

30.16 Bollard pull. The pulling power of a ship at a given power rating, but with no way on.

30.17 Breast line. A mooring line from ship to pier, or ship to ship, perpendicular to the fore and aft axis, or at right angles to the ship.

30.18 Bridle. A Y-shaped arrangement of line, wire, or chain. The two legs and the imaginary line between the points of attachment should form an equilateral triangle. They are joined together at a fish plate or shackle, which in turn is connected to the pendant.

30.19 Bridle leg. A single part or leg of a bridle.

30.20 Bridle rig. The rigging of a tow with two legs from the tow's bow to a flounder plate.

30.21 Bull rope. A towline.

30.22 Bullnose. A closed chock at the bow of a vessel.

30.23 Cable-laid. Three ropes laid up like strands from right- to left-handed. The ropes which serve as strands are laid up from left to right (for example, non-rotating wire).

30.24 Caprail. Rail on the stern of a towing vessel, over which the hawser sweeps.

30.25 Capstan. A powered revolving device with a vertical axis, used for heaving in mooring lines.

30.26 Carpenter stopper. A mechanical device consisting of a pair of gates that enclose a sliding jaw that can be opened by knocking away a latch that holds them closed.

30.27 Catenary. The dip in a line or hawser when strung between two objects such as tug and tow.

30.28 Chafing gear. Any material used to prevent wear on lines or towing hawsers.

30.29 Chafing pendant. A length of chain used to reduce chafing or wearing.

30.30 Chain bridle. A chain used in a bridle rig or a single pendant rig.

30.31 Chain pendant. A piece of chain used as a strap; chain rigged between the tow and tow hawser; chain used to create a catenary.

30.32 Check. To keep a strain on the line without parting the line.

30.33 Chine. The point in the cross section of a tug's hull where the straight side and bottom meet below the water. The usual location of the bilge keel.

30.34 Chinese power. Power make up with tug's bow facing stern of the ship.

30.35 Chock. A heavy metal casting fitted on the sides of a deck or on the bow and stern of a ship through which lines pass; may be open or closed.

30.36 Cleat or clevis. The common deck fitting around which lines are fastened or eye splices are passed over.

30.37 Coastwise. This term refers to any area within 20 miles (32.2 km) of the shoreline and, in towing, routes that stay within such an area.

30.38 Counter. The rounded spoonlike stern of a vessel.

30.39 Crabbing. Moving sideways through the water.

30.40 Cutwater. The stem of a ship, the forwardmost portion of the bow, which cuts the water as the ship moves.

30.41 Dead ship. A ship that has no power or is not using its propeller during towage.

30.42 Depth towline. The distance from the water surface to the bottom of the catenary.

30.43 Dip. Passing one line under another.

30.44 Dog. A pawl; a device applied to the winch drum to prevent rotation.

30.45 Drogue. A device used to slow rate of movement and to reduce yaw.

30.46 Eye splice. A loop formed in the end of a rope by tucking the strand ends under or around the strands of the line part of the rope. A thimble is often used in the loop.

30.47 Fair current. When tug and tow are favored by a current running in the direction they are proceeding.

30.48 Fairlead. Metal fittings which lead lines in the direction desired.

30.49 Fairlead chock. A chock with a roller(s) installed to lead a line to a bitt or cleat.

30.50 Fake (faked down). To lay out a line in long, flat bights, the whole being much longer than wide, in such form that when needed, it will pay out freely.

30.51 Falling off. Drifting away from a desired position or direction.

30.52 Fid. A tapered piece of hardwood used in splicing cordage.

30.53 Fish plate, flounder plate. A heavy triangular steel plate with a bushed hole in each corner that accepts the shackle pin from each leg of a towing bridle and that of the towing pendant. It is also known as a union plate or spider.

30.54 Free-spooling. To lengthen scope by releasing the clutch-brake and allowing the towing drum to rotate as a result of the drag of the tow. The tow motor is stationary.

30.55 Freshening the nip. Paying out or hauling in the line to move the contact point so as to distribute wear.

30.56 Getting way off. Slowing a tug or tow to stop.

30.57 Getting way on. Moving a tug or tow ahead after being stopped.

30.58 Girded. A situation in which a tug capsizes due to the strain from a line at an angle of 90 degrees or more, which was not released. Girding is also incorrectly referred to as being caught in irons.

30.59 Gobrope. A line used on many European tugs to regulate the lead of a short towline. One end is usually fastened on deck and the other led through a shackle or closed fairlead to a gypsy so that its tension can be adjusted. Occasionally, it refers to the hold-down arrangement of towing hawsers on ocean tugs.

30.60 Gun tackle. One using two single-sheave blocks.

30.61 Gypsy. A small spool that is often an appendage of a towing winch, or that can be individually mounted vertically.

30.62 Gypsy head. The drum of a winch (usually horizontal), around which a rope is turned for heaving in. Normally used with a fairleader.

30.63 H-bitt. A substantial structure in the shape of a "H-bitts", mounted on the deck and used to lead or stop off a tow hawser. A head point used for towing.

30.64 Hawser. A heavy line or wire rope; any line over 5 inches (127 mm) in circumference.

30.65 Hawser board. A wooden, steel, or aluminum plate or beam placed under the tug's hawser to prevent chafing on the stern rail when towing at sea.

30.66 Head-and-tail. When two vessels are side by side with their bows and sterns in opposite directions. Also "Chinese".

30.67 Head current. When tug or tow are heading into the current. Also known as bucking the tide.

30.68 Headline. A line from the bow bitt of tug to the vessel; line is taut.

30.69 Headline and (port/starboard) quarterline. A headline and a line from the quarter bitt (port/starboard) of a tug to a ship. Headline taut, quarterline not taut till 90 degrees to vessel.

30.70 Heave around. To haul in.

30.71 Heave in. To haul in a line by hand or power.

30.72 Heave taut. To haul in until the line has a strain on it.

30.73 Heave to. To hold a vessel or tow heading into the wind and sea at very slow speed and still maintain control while minimizing the effect during rough weather or during other conditions that may prevent progress on a desired course.

30.74 Heeling. Listing over.

30.75 Hockle. Kinking of one or more strands of twisted fiber line or wires on a wire rope.

30.76 Hog (hogging). Deviation of the keel from a straight line when the keel is concave downward.

30.77 Hogging strap. A restraining line executing force on the towline to hold it close against the caprail or closer to the fantail.

30.78 Hook her up. Used by captains and harbor pilots as an order to go full speed.

30.79 Hooking up. Connecting up to a tow.

30.80 In irons. An expression used by shiphandlers to indicate limited control to maneuver the ship.

30.81 In step. An expression used to indicate that the towing ship and its tow are riding the crests and troughs of waves simultaneously.

30.82 Keckling. Chafing gear on a tow hawser, consisting of old rope.

30.83 Lateral control wire. An auxiliary wire used to move the tow hawser athwartships.

30.84 Lay. The direction of the twist of strands of a rope.

30.85 Lay length. The distance measured parallel to the axis of the rope (or strand) in which a strand (or wire) makes one complete helical convolution about the core (or center).

30.86 Lazy jacks. Small lines used to tend and recover the towline when rigging a recovery for a Liverpool bridle.

30.87 Left-hand turn(s). The coiling or placing of a line around a capstan or gypsy in a counter-clockwise direction, which is usually against the lay of the line and will cause kinking.

30.88 Let go. To release and take in lines from a tug or towed unit as directed.

30.89 Light tug. A tug or towboat running without a tow, also known as running lightheaded.

30.90 Liverpool bridle. A method of rigging a tow used to maintain ship control when the large yawing of the tow can overcome directional stability of the towing vessel; most commonly used in debeaching a ship.

30.91 Making up. The placing and securing of lines from a tug or towboat in order to tow.

30.92 Map. The method of towline identification for wear, chafing, and so forth.

30.93 Messenger. A light line used for hauling over a heavier rope or hawser.

30.94 Mississippi. Headline and port and starboard quarterlines to ship. All lines taut.

30.95 Moderate seas. Conditions up to and including sea state 3.

30.96 Molly gogger. A line, chain, or short wire connected to a shackle on the towing hawser that restricts its lead and arc at the stern.

30.97 Monkey fist. A heavy knot with a weight placed on the end of a heaving line. It is made of three interwoven strands of cordage.

30.98 Nip. A sharp bend in a line or wire.

30.99 Norman pin. A steel rod or post that can be raised or lowered and which is usually mounted toward the stern of a vessel to limit the sweep of a hawser across the rear deck to provide safe areas for the crew.

30.100 On the brake. Towing with the tow hawser restrained by the brake system of the towing machine or winch.

30.101 Out of shape. When a tug, towboat, or tow is in a very awkward position in attempting to land or pick up a tow, or to make a maneuver as planned.

30.102 Parcelling. Wrapping a line or wire with strips of canvas.

30.103 Pay out. To slack off on a line, or let it run out.

30.104 Pendant (pendant rig). A single wire or chain that leads from the apex of a towing bridle to the towline; a length of wire used as an underrider wire in a "Christmas Tree" rig.

30.105 Pigtail. A term applied to the chain pendant, which is connected to the bridles, used on tugs on the U.S. West Coast.

30.106 Plate shackle. A connecting device made up of two metal plates and bolts, used to connect the towing pendant and the towline, or to serve as a connecting unit in other parts of a towing rig.

30.107 Power make-up. Headline from tug leading forward on ship, tow leg leading afterward, quarterline leading 90 degrees off quarter with tug flat against ship.

30.108 Preventer. Any line, wire, or chain whose general purpose is to act as a safeguard in case something else carries away.

30.109 Preventer hawser. A hawser secured to the chain as a preventer.

30.110 Pudding. Chafing gear used to protect such items as a towline.

30.111 Purchase. A general term for any mechanical arrangement of blocks and tackle for multiplying force.

30.112 Put out. The act of paying out.

30.113 Quarter rollers. Rollers mounted in the forward and stern waists of a tug for mooring, beach gear, and other similar operations.

30.114 Reeving. The threading of a line or wire through a block, sheave, or other parts of a wire rope.

30.115 Riding chocks. The chock on deck through which the towing gear passes inboard.

30.116 Roundings. Condemned rope under 4 inches (102 mm) in circumference used to wrap around a rope to prevent chafing.

30.117 Rouse out. To haul or get out for use something that is stowed.

30.118 Run out. To send out, as to run out a towing hawser.

30.119 Sag (sagging). Deviation of the keel from a straight line when the keel is concave upward.

30.120 Scope. The amount of towline streamed.

30.121 Serving. To wrap any "small stuff" tightly around a rope that may or may not have been previously wound and parcelled.

30.122 Short stay. When the anchor is hove in and the chain out is a little more than the depth of water. Also known as straight up and down.

30.123 Shot. A standard length of chain, 15 fathoms (90 feet) (29.5 m).

30.124 Side-slipping. Moving sideways through the water.

30.125 Skeg. A continuation of the keel fore or aft, or on aft propeller installation it supports the rudder post.

30.126 Sling-shot. A line from the bow bitt of tug to the bullnose of the ship. This is used for pushing on either side of the bow without casting off. Enough slack in line to allow tug to maneuver around bow.

30.127 Slip stopper. A chain stopper hooked or shackled to the deck and fitted with a slip-hook for holding the towline.

30.128 Smit towing bracket. A specialty designed deck mounted device used to quickly connect a tow pendant to the tow.

30.129 Snapback. The force generated when a line carries away.

30.130 Snorter. Four lines with a common eye.

30.131 Snotter. A short piece of chain, wire, or rope used between the hold-down point and the tow hawser to restrict its movement near the stern of tugs.

30.132 Soft line. Manila, hemp, sisal, all the polyesters, nylon, or other synthetic fiber blends of cordage.

30.133 Spanish windlass. A device to exert force in bringing together two parts of a rope for any purpose. Shortening a pair of parallel lines by twisting them with a lever inserted between them at a right angle to their axis.

30.134 Split head line. Two lines from forward chock of tug of ship. One leading forward of ship and one leading aft. Lines taut.

30.135 Spooling. Winding a rope on a reel or drum.

30.136 Spring (springline). A mooring or docking line leading at an angle less than 45 degrees with the fore-and-aft lines of the vessel. Used to turn a vessel or prevent it from moving ahead or astern.

30.137 Spring, stretcher. A pendant or grommet used to dampen towline surges.

30.138 Standing part. The middle section of rope.

30.139 Steady tension. The average or mean tension seen by the tow hawser calm water resistance.

30.140 Stern line. A mooring line leading from the stern of a vessel.

30.141 Stern rollers. The horizontal and vertical rollers at the very stern of a tug used to lead, capture and control the tow hawser.

30.142 Stick out. Usually refers to paying out more line or hawser; also to the original connecting of the hawser.

30.143 Stophorn. A curved horn (similar to a half cleat) welded to the bulwark toward the stern with a function similar to that of a Norman pin. A stophorn should never be used as a fairlead.

30.144 Stopper. A short length of rope secured at one end and used in order to stop it from running.

30.145 Stopper hitch. Two rolling hitches backed up with half-hitches to secure lines.

30.146 Stop off. To tie tightly but lightly so that an object can be easily released.

30.147 Stream. To extend, or increase, the scope of the tow hawser.

30.148 Surge. To hold a line taut on a winch drum without hauling in; to slack off a line or let it slip around a fitting.

30.149 Surge load. Sudden strain on a towline caused by the pitching, sheering, or yawing of the tow or the towing ship.

30.150 Tow leg. Normally wire and leads from forward shoulder bitts of the tug to the ship. Lines taut.

30.151 Underrider. The wire rope, chain, or combination used as a pendant heavy enough to pass under a leading tow to a trailing tow at a sufficient depth, so as not to foul on the leading tow.

30.152 Veer. To pay out chain or line.

30.153 Veer away. To pay out rope or chain under control by reversing winch or windlass rather than by surging.

30.154 Gypsy head. The drum of a winch (usually horizontal), around which a rope is turned for heaving in. Normally used with a fairleader.

30.155 Warping head. The drum on a windlass (usually vertical), around which a rope is turned for heaving in.

30.156 Whip. To bind the end of a piece of line so it will not unravel.

30.157 Worming. Filling the lays of line or wire before parcelling.